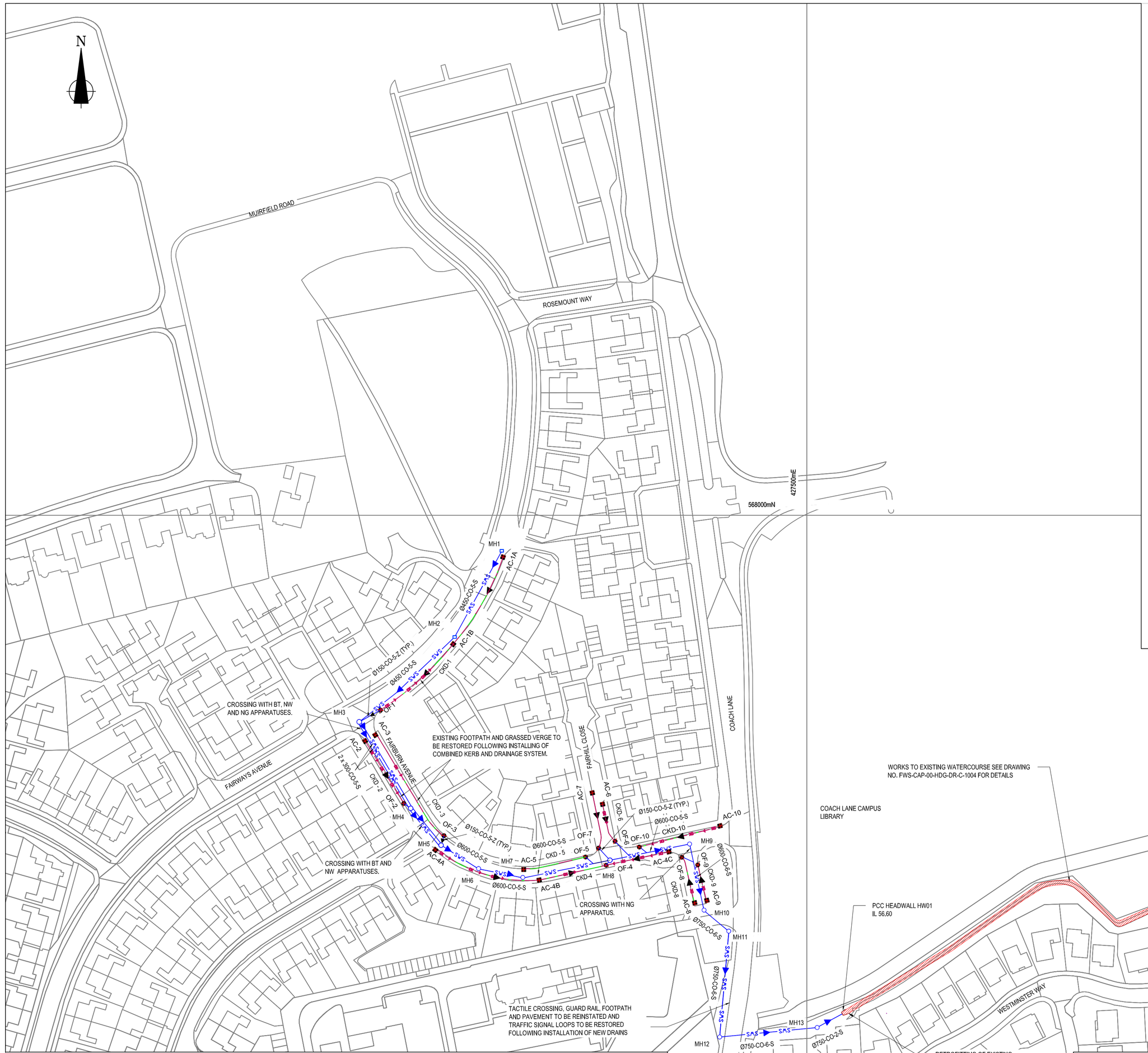

SAFETY, HEALTH AND ENVIRONMENTAL INFORMATION

HS

HEALTH AND SAFETY

SIGNIFICANT HEALTH AND SAFETY RISKS IDENTIFIED BY THE DESIGNERS:-

CONSTRUCTION:

1.1. SITE SAFETY / SECURITY: ENSURE WORK AREAS ARE SEGREGATED FROM THE GENERAL PUBLIC BY MEANS OF ROBUST PHYSICAL BARRIERS, AND THESE AREAS ARE SECURE OUTSIDE OF WORKING HOURS.

1.2. THE OVERALL NUMBER OF WORK AREAS ARE TO BE KEPT TO A MINIMUM. ENSURE DEFINED EGRESS AND ACCESS ROUTES FOR CONSTRUCTION VEHICLES.

1.3. CONSTRUCTION WORKS IN THE VICINITY OF THE GENERAL PUBLIC, AND MOVING PUBLIC SERVICE VEHICLES.

1.4. SHALLOW / UNCHARTED PUBLIC UTILITY APPARATUS IN AREAS OF EXCAVATION.

1.5. THE PEDESTRIANS AND CYCLISTS MAY ENTER SEGREGATED AREAS OF THE WORKS. CONSIDER ROPING BETWEEN CONES.

E

ENVIRONMENTAL

SIGNIFICANT ENVIRONMENTAL RISKS IDENTIFIED BY THE DESIGNERS:-

1. THERE IS CURRENTLY NO KNOWN ENVIRONMENTAL RISK IDENTIFIED ON THIS SITE.

THESE LISTS DO NOT INCLUDE RISKS THAT LIKELY TO BE APPARENT TO A COMPETENT CONTRACTOR. SIGNIFICANT RISKS ARE DEFINED AS THOSE WHICH ARE:-

- UNUSUAL;
- NOT OBVIOUS; OR
- DIFFICULT TO MANAGE.

IT IS ASSUMED THAT ALL WORKS ON THIS DRAWING WILL BE CARRIED OUT BY A COMPETENT CONTRACTOR, WORKING WHERE APPROPRIATE TO APPROVED METHOD STATEMENTS AND RISK ASSESSMENTS.

NOTES:

1. THIS DRAWING SHOULD NOT BE SCALED. ALL INFORMATION MUST BE CHECKED ON SITE, AND THE CONTRACTOR IS TO REPORT ANY OMISSIONS OR ERRORS TO THE CONTRACT ADMINISTRATOR.
2. THIS DRAWING SHALL BE READ IN CONJUNCTION WITH ALL OTHER RELEVANT DRAWINGS, SPECIFICATION APPENDICES AND HIGHWAY CONSTRUCTION DETAILS.
3. THE LOCATION AND ORIENTATION OF EXISTING SEWERS, MANHOLES ARE INDICATIVE. POSITION, SIZE AND DEPTH OF ALL EXISTING MANHOLE, SEWERS, GULLIES AND SERVICES SHALL BE ESTABLISHED PRIOR TO COMMENCEMENT OF WORKS ON SITE.
4. CONTRACTOR TO CHECK FOR SERVICE CLASHES PRIOR TO COMMENCING THE WORKS.
5. CONTRACTOR TO ALLOW FOR ALL NECESSARY WORKS TO EXISTING DRAINAGE TO ALLOW NEW CONNECTIONS TO BE COMPLETED.
6. CONTRACTOR TO INCLUDE FOR SEALING, ABANDONED CONNECTIONS, BENCHING AND ACCESS MODIFICATIONS AS REQUIRED.
7. BEDDING AND BACKFILL MATERIAL TO CONFORM TO MCHW F SERIES No. F1
8. CONTRACTOR TO CARRY OUT CHEMICAL LABORATORY TESTING ON THE SUSPECT MATERIAL FOR CLASSIFICATION, PRIOR TO DISPOSAL AT AN APPROPRIATELY LICENSED FACILITY, CAPABLE OF ACCEPTING SUCH WASTES.
9. FOR SCHEDULE OF MANHOLES AND COMBINED KERB AND DRAINAGE SYSTEM REFER TO DRAWING NO FWS-CAP-00-HDG-DR-D-1003
10. THE REINSTATEMENT OF TRENCHES TO CONFORM TO NEWCASTLE CITY COUNCIL STANDARD DETAILS N07/01 AND N07/02.CONTRACTOR TO REFER TO TYPE R1 FOR REINSTATEMENT UNDER CARRIAGEWAY AND TYPE R5 FOR REINSTATEMENT UNDER FOOTWAY.
11. DURING THE CONSTRUCTION, TWO-WAY TRAFFIC FLOWS MUST BE MAINTAINED AND EXISTING TRANSPORT CORRIDOR MUST BE KEPT OPERATIONAL AT ALL TIMES.
12. ACCESS TO NORTHUMBRIA UNIVERSITY CAMPUS, LIBRARY AND RESIDENTIAL PROPERTIES IS TO BE MAINTAINED THROUGHOUT THE WORKS.
13. OPENING IN BACK WALL CAST TO SUIT THE OUTSIDE DIAMETER PIPE AT INVERT HEIGHT TO OPENING AS REQUIRED.
14. GRATING MANUFACTURED FROM 40x10 FLAT AT 75mm CENTRES SPACED 50mm AWAY FROM THE BACK WALL. FULLY WELDED AND HOT DIP GALVANISED.
15. UNITS SHOULD BE BEDDED ON A MINIMUM 100mm OF SEMI-DRY CONCRETE. SIT THE HEADWALL LEVEL OR WITH A SLIGHT FALL 1:50 FROM PIPE TO SPILL MOUTH.
16. THE LOCATIONS OF THE DROP KERBS SHOWN IN THE LAYOUT ARE INDICATIVE AND SUBJECT TO CHANGE AS PER SITE CONDITIONS

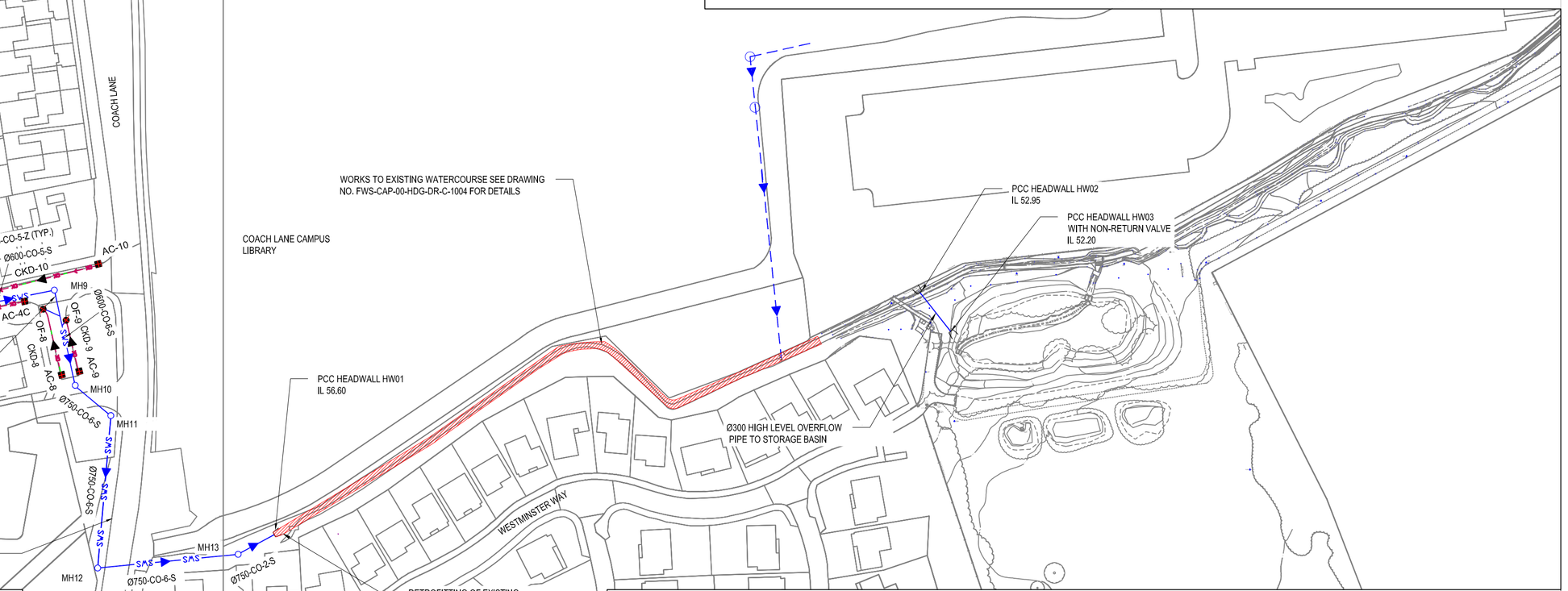

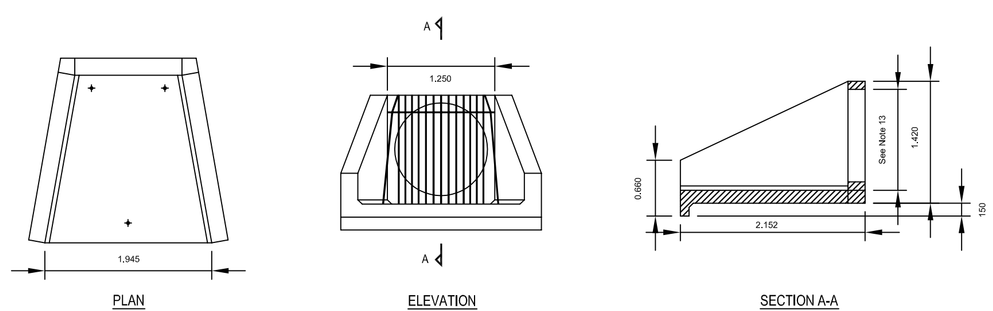

PCC HEADWALL DETAILS HW01

SCALE 1:50

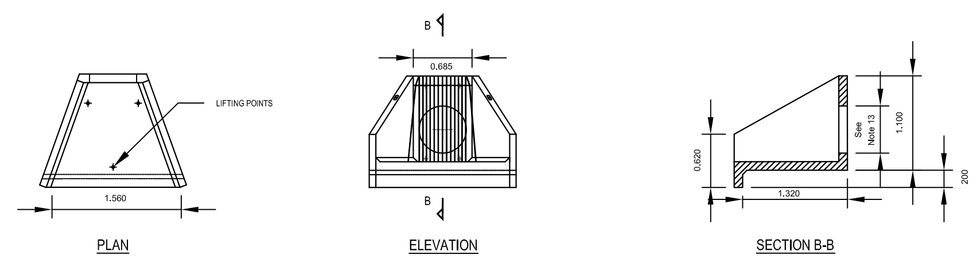

PCC HEADWALL DETAILS HW02 AND HW03

SCALE 1:50

KEY:

CK	PROPOSED COMBINED KERB DRAIN (CDKB) BEANY BLOCKS 205MM MARSHALLS OR EQUIVALENT
	PROPOSED COMBINED KERB DRAIN (CDKB) DROP CROSSING MARSHALLS OR EQUIVALENT
OF	PROPOSED KERB OUTFALL
AC	ACCESS COVER
	EXISTING SURFACE WATER SEWER
	WORKS TO EXISTING WATERCOURSE
	PROPOSED MANHOLE
Ø450-CO-1-S SWS	PROPOSED SURFACE WATER SEWER Ø450 - PIPE DIAMETER CO- CONCRETE PIPE 1- DESIGN GROUP S- PIPE WITH GRANULAR SURROUND Z- PIPE WITH CONCRETE SURROUND

ABBREVIATIONS:

NW: NORTHUMBRIAN WATER
BT: BRITISH TELECOM
NG: NORTHERN GAS

Rev	Drwn	Chkd	App'd	Description	Date

Purpose of Issue
Issue for Construction

Classification
Commercial in Confidence

Client
NEWCASTLE CITY COUNCIL

Project
FAIRWAYS ESTATE
FLOOD ALLEVIATION

Drawing
PROPOSED DRAINAGE LAYOUT

Scale @ A1	Drawn	Checked	Approved
1:1000	SB	WA	RB

Project No.	Date
CS067775	5/12/17

Drawing Identifier
Project - Originator - Zone - Level - File Type - Role - Number
FWS-CAP-00-HDG-DR-C-1001

BS1192 Compliant revision
C01

CAPITA
Real Estate & Infrastructure
The Quadrant, The Silverlink North, Cobalt Business Park, North Tyneside NE27 0BY - 0191 643 4819
www.capitaproperty.co.uk
Capita Property and Infrastructure Ltd.

© Capita Property and Infrastructure Ltd
Y:\Infrastructure\Flood Alleviation\CS 067775 - Fairburn Avenue\03 Delivery\HDG Drainage\03 Drawings\Construction Drawings\HDG - DRAINAGE\FWS-CAP-00-HDG-DR-C-1001.dwg
Print Date:08/12/2017 09:18:16